SIEMENS

Data sheet 3VA1180-4EE36-0AA0

Siemens EcoTech

circuit breaker 3VA1 IEC Frame 160 breaking capacity class S Icu=36 kA @ 415 V 3-pole, line protection TM220, ATFM, In=80 A overload protection Ir=56 A...80 A short-circuit protection Ii=10 x In terminal connection

Model	
product brand name	SENTRON
product designation	Molded case circuit breaker
design of the product	Line protection
design of the overcurrent release	TM220
protection function of the overcurrent release	LI
number of poles	3
General technical data	
insulation voltage / rated value	800 V
operating voltage / at DC / rated value	500 V
operating voltage / at AC / rated value	690 V
power loss [W] / maximum	19.2 W
power loss [W] / for rated value of the current / at AC / in hot operating state / per pole	6.4 W
mechanical service life (operating cycles) / typical	20 000
electrical endurance (operating cycles) / at AC-1 / at 380/415 V	9 000
electrical endurance (operating cycles) / at AC-1 / at 690 V	6 300
product feature / for neutral conductors / upgradable/retrofittable / short-circuit and overload proof	No
ground-fault monitoring version	Without
product function	
● communication function	No
● other measurement function	No
Net Weight	974.5 g
Current	
operational current	
● at 40 °C	80 A
● at 45 °C	80 A
● at 50 °C	80 A
● at 55 °C	78 A
● at 60 °C	77 A
● at 65 °C	75 A
● at 70 °C	74 A
Switching capacity according to IEC 60947	
switching capacity class of the circuit breaker	S
maximum short-circuit current breaking capacity (Icu)	

Subject to change without notice
© Copyright Siemens

● at 240 V	55 kA
● at 415 V	36 kA
● at 440 V	25 kA
● at 500 V	7 kA
● at 690 V	7 kA
operating short-circuit current breaking capacity (Ics)	
● at 240 V	55 kA
● at 415 V	36 kA
● at 440 V	25 kA
● at 500 V	5 kA
● at 690 V	5 kA
short-circuit current making capacity (Icm)	
● at 240 V	121 kA
● at 415 V	75.6 kA
● at 440 V	52.5 kA
● at 500 V	11.9 kA
● at 690 V	11.9 kA
design of short-circuit protection	For switching power values in DC networks, see the 3VA molded case circuit breaker device manual; link to be found under Service & Support in the last chapter
Adjustable parameters	
product feature / for L-tripping / can be switched on/off	No
adjustable response value setting current (Ir) / of the L-trip / with I2t characteristic	
● minimum	56 A
● maximum	80 A
adjustable response value delay time (tr) / for L-tripping / with I2t characteristic	
● minimum	1 s
● maximum	1 s
adjustable response value setting current (Ii) / for I-tripping	
● minimum	800 A
● maximum	800 A
adjustable setting current (InN) / for N-tripping	
● minimum	0 A
● maximum	0 A
product function / grounding protection	No
Mechanical Design	
product component	
● undervoltage release	No
● voltage trigger	No
● trip indicator	No
height [in]	5.12 in
height	130 mm
width [in]	3 in
type of connectable conductor cross-sections / of the round conductor terminal / stranded	1 x (1,5 - 70 mm²)
width	76.2 mm
depth [in]	2.76 in
depth	70 mm
Connections	
arrangement of electrical connectors / for main current circuit	Front terminal
type of electrical connection / for main current circuit	box terminal on both sides
design of the surface / of the connections / on the top of the switch (N, 1, 3, 5)	Silver
design of the surface / of the connections / on the bottom of the switch (N, 2, 4, 6)	Tin
Auxiliary circuit	
number of CO contacts / for auxiliary contacts	0
Accessories	
product extension / optional / motor drive	Yes

Subject to change without notice
© Copyright Siemens

Environmental conditions	
protection class IP / on the front	IP40
ambient temperature	
● during operation / minimum	-25 °C
● during operation / maximum	70 °C
● during storage / minimum	-40 °C
● during storage / maximum	80 °C

Environmental footprint	
Environmental Product Declaration(EPD)	Yes
global warming potential [CO2 eq] / total	190 kg
global warming potential [CO2 eq] / during manufacturing	4.67 kg
global warming potential [CO2 eq] / during operation	186 kg
global warming potential [CO2 eq] / after end of life	-0.826 kg
reference code / according to IEC 81346-2	Q

Approvals / Certificates

General Product Approval

Miscellaneous

General Product Approval

Confirmation

EMV

Test Certificates

Miscellaneous

Special Test Certificate

Test Certificates

Type Test Certificates/Test Report

Maritime application

CCS (China Classification Society)

other

Miscellaneous

Confirmation

Environment

Environmental Confirmations

Environmental Confirmations

Environment

Further information

Information on the packaging
https://support.industry.siemens.com/cs/ww/en/view/109813875
Information for data generation and storage
https://support.industry.siemens.com/cs/ww/en/view/109995012
Information- and Downloadcenter (Catalogs, Brochures,…)
https://www.siemens.com/lowvoltage/catalogs
Industry Mall (Online ordering system)
https://mall.industry.siemens.com/mall/en/en/Catalog/product?mlfb=3VA1180-4EE36-0AA0
Service&Support (Manuals, Certificates, Characteristics, FAQs,...)
https://support.industry.siemens.com/cs/ww/en/ps/3VA1180-4EE36-0AA0

Subject to change without notice
© Copyright Siemens

Image database (product images, 2D dimension drawings, 3D models, device circuit diagrams, ...)
https://www.automation.siemens.com/bilddb/cax_en.aspx?mlfb=3VA1180-4EE36-0AA0
CAx-Online-Generator
https://www.siemens.com/cax
Tender specifications
https://www.siemens.com/specifications
Kennlinien
https://curves.simaris.siemens.com/curves/3VA1180-4EE36-0AA0

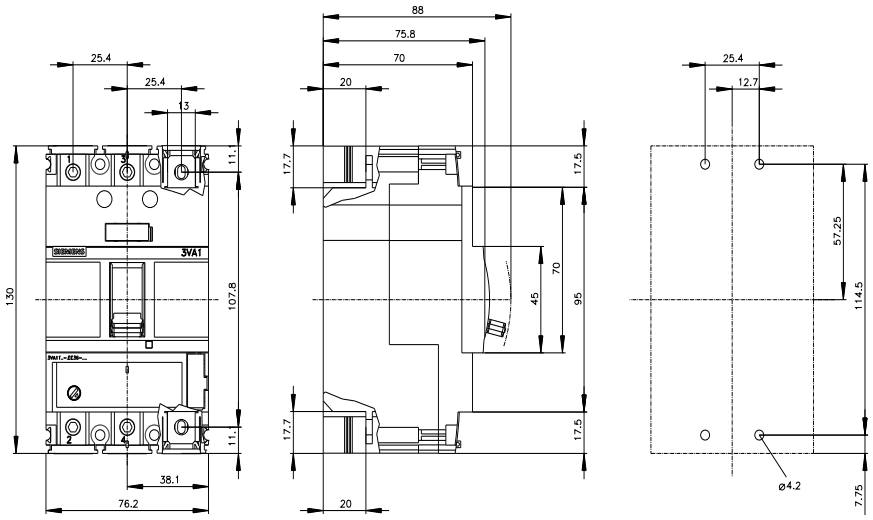

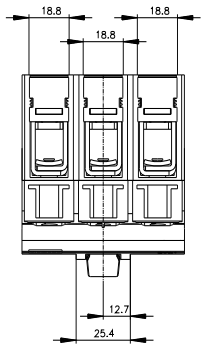

Subject to change without notice
© Copyright Siemens

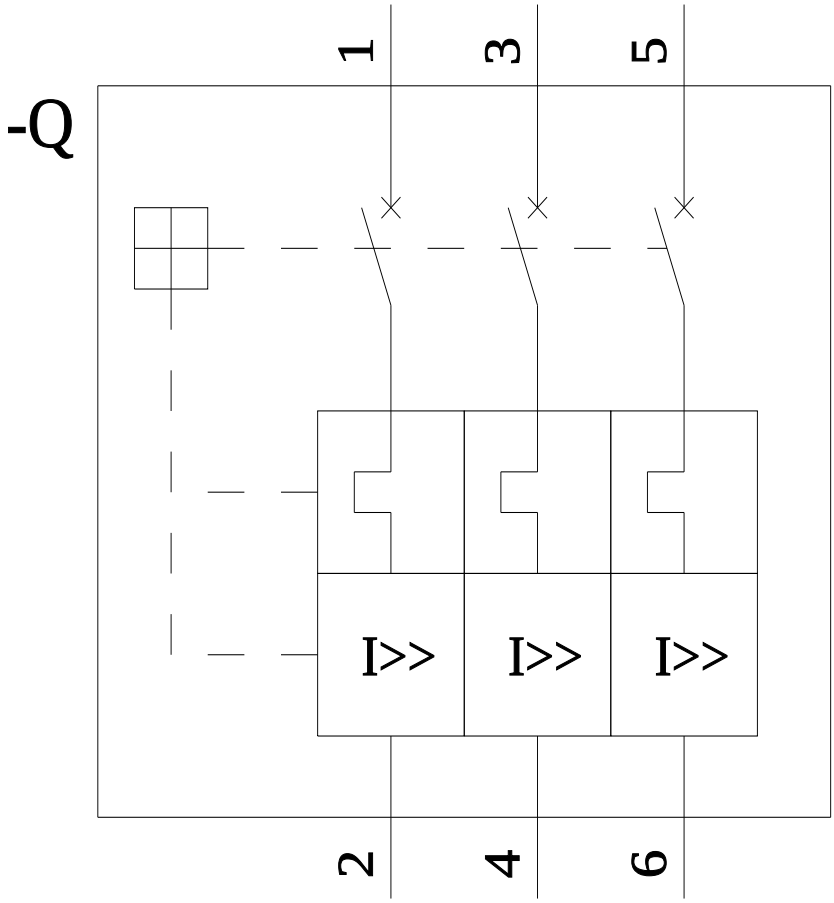

last modified: 9/2/2026

Subject to change without notice
© Copyright Siemens

Subject to change without notice
© Copyright Siemens